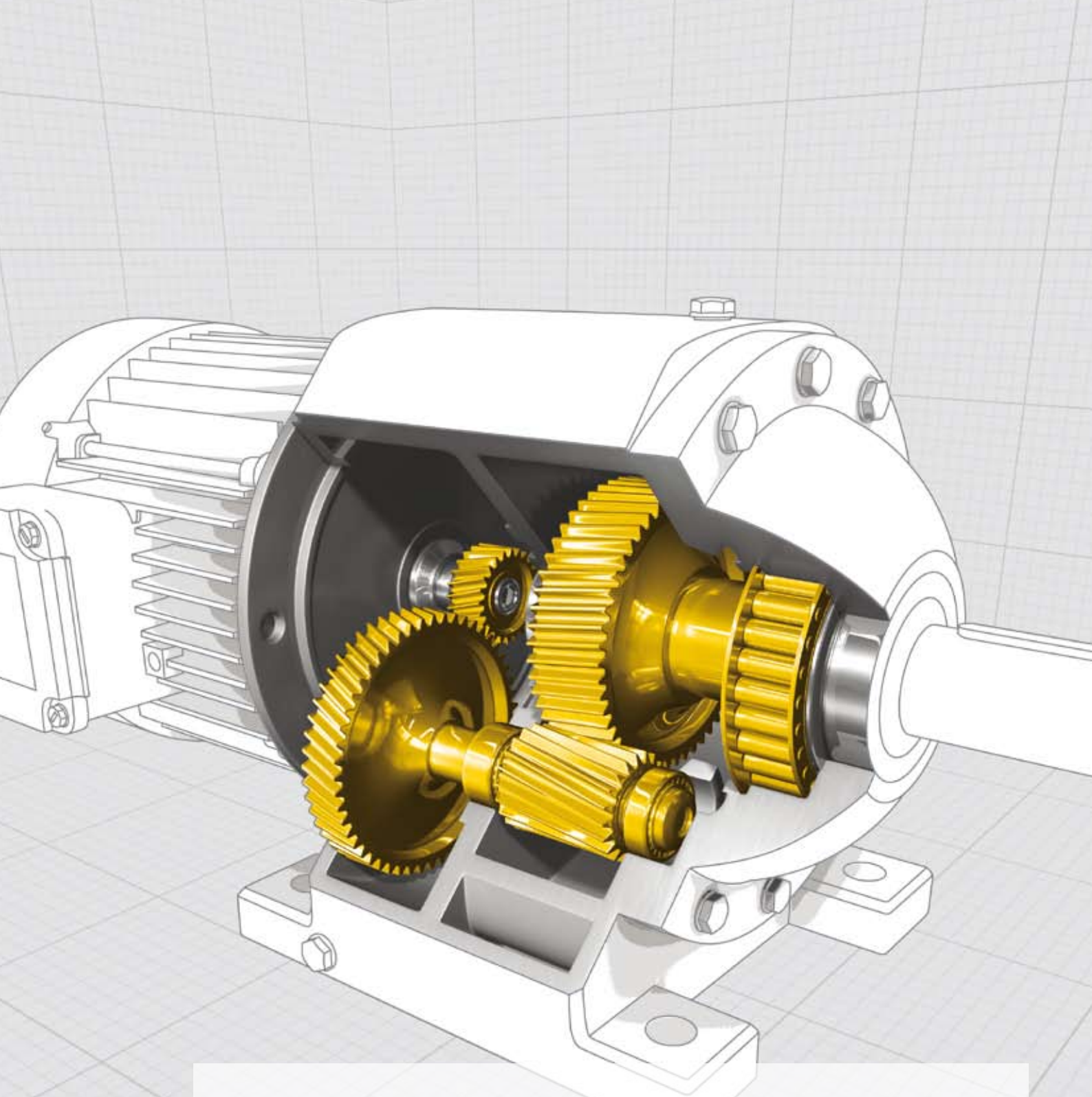

# DESIGNED TO COPE WITH HEAVY DEMANDS.

# JUST LIKE OUR INDUSTRIAL GEAR OILS – SHELL OMALA.

**DESIGNED TO MEET CHALLENGES**

**EVERY PART OF YOUR MACHINE OR PROCESS HAS BEEN METICULOUSLY ENGINEERED, SO YOU WANT TO BE SURE THAT YOU CHOOSE A LUBRICANT THAT HAS BEEN DESIGNED TO ENSURE THAT YOUR EQUIPMENT IS WELL PROTECTED AND WORKS EFFICIENTLY.**

The Shell Omala range of industrial gear oils has been developed to enable equipment operators to select the oil that will deliver optimum value to their operations through enhanced wear protection, long oil life and high system efficiency.

## WEAR PROTECTION

Protecting machine gears from wear and corrosion is important for prolonging asset life and preventing breakdowns.

The Shell Omala range of industrial gear oils offers protection across a wide range of applications: from the extreme-pressure rolling contacts in spur gears to the sliding contacts in worm gears. It includes Shell's latest synthetic oils such as Shell Omala S4 GX, which offers exceptional long-life performance under extreme loads and temperatures.

## OIL LIFE

The longer an oil's life, the less fluid maintenance your equipment requires, so it can continue to operate without interruption. The Shell Omala range enables you to match oil life to your operational needs.

Customers using Shell's standard products, such as Shell Omala S2 G, are extending oil-drain intervals by up to 200% for some applications. Customers are trading up to synthetic oils, such as Shell Omala S4 GX, for even longer oil life and other benefits.

## SYSTEM EFFICIENCY

Shell Omala oils can help to maintain or improve system efficiency by protecting against the impact of oil ageing and contamination for efficient lubrication. Advanced synthetic oils such as Shell Omala S4 WE can offer additional benefits by providing improved energy efficiency compared with conventional oils.

## A RANGE OF INDUSTRIAL GEAR OILS TO MEET YOUR NEEDS

To meet the challenges of a wide range of gear types and applications, Shell has designed a portfolio of oils that enables you to choose a product to match your technical and operational needs.

### PRODUCT NAME SUFFIX KEY

- **E** = Energy saving, high efficiency
- **G** = Gears – spur and helical
- **P** = Extreme/high pressure
- **W** = Worm drive
- **X** = Extra/extreme performance

### APPLICATION ICON KEY

- Factory/machine applications
- Enclosed gears
- High temperature
- Extreme load
- Shock load
- Long life
- Worm gear

### THE SHELL OMALA "G" RANGE

Enclosed industrial spur and bevel gear applications from standard to demanding high-load and extended-duty applications

### THE SHELL OMALA "G" SPECIALITY

Enclosed industrial spur and bevel gears where extra shock-load protection is needed or particulate contamination occurs

### THE SHELL OMALA "W" RANGE

Industrial worm-drive applications from standard to demanding high-load and extended-duty applications

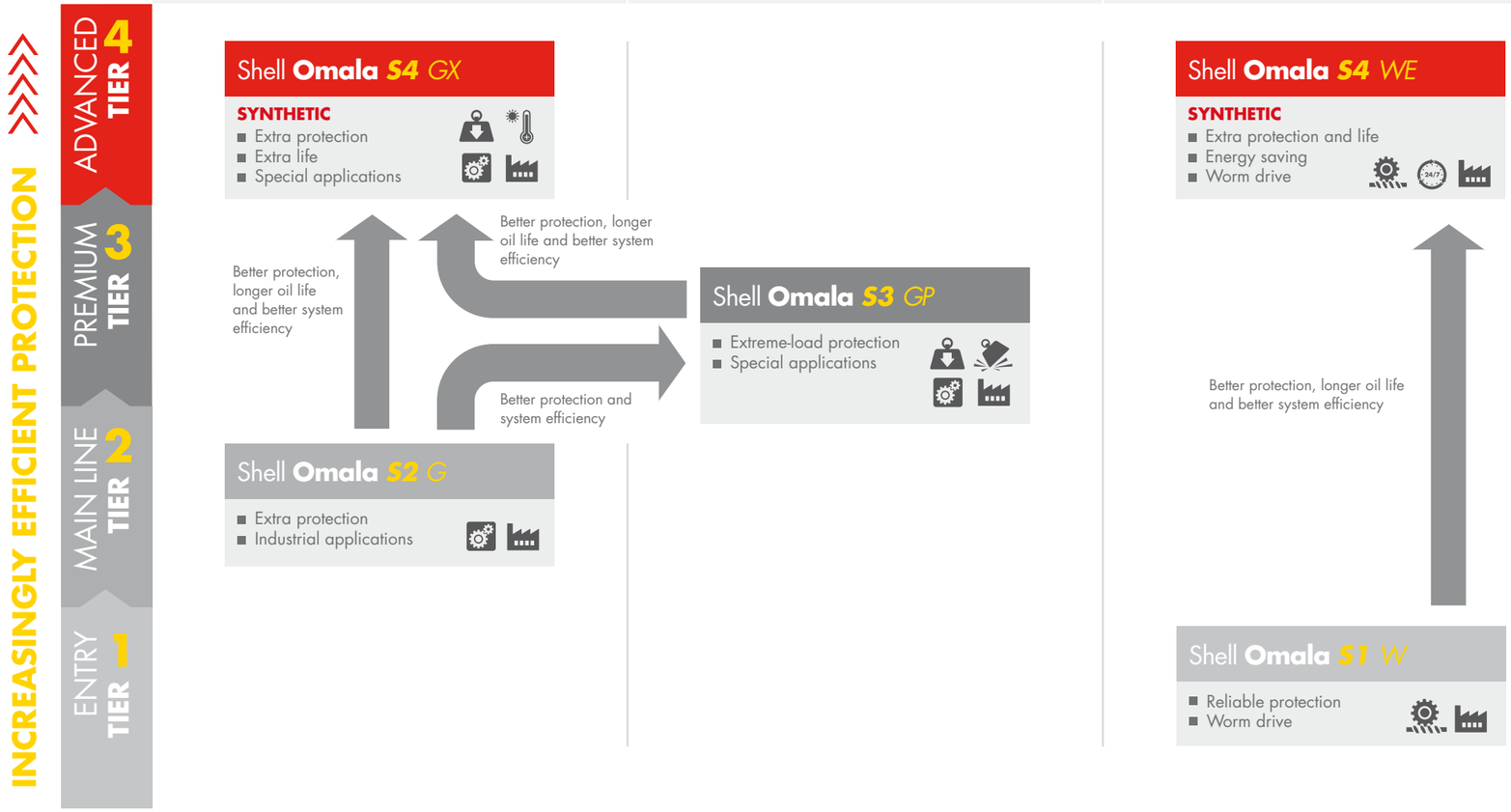

## PERFORMANCE YOU CAN COUNT ON

Shell's industrial gear oils are developed in close co-operation with customers and equipment makers. The Shell Omala range is approved or listed by hundreds of equipment makers, and its performance has been demonstrated in real-life applications to help reduce the possibility of your equipment letting you down.

## REAL-WORLD VALUE DELIVERY

Users of Shell Omala oils across a wide range of industries are benefiting from proven, robust and reliable lubrication that adds value to their operations. For instance, by switching to Shell Omala S4 GX, some customers are

- increasing equipment protection: one customer reports virtually eliminating gearbox failures and saving over $50,000 a year
- extending oil-drain intervals. Some equipment manufacturers approve Shell Omala S4 GX for four-year drain intervals, and some customers have extended their oil-drain intervals by up to five times.
- enhancing operational efficiency. Wind-turbine operators have increased turbine availability by reducing shutdowns due to foaming, high temperatures and filter blocking.

*Shell Omala S4 GX – For the longest oil life in the Shell range*

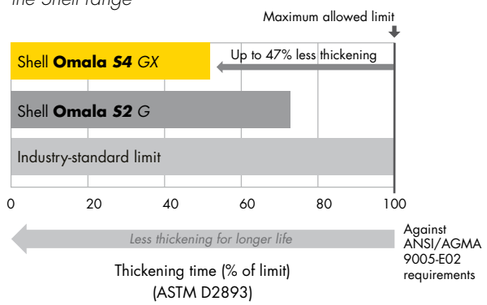

| Product | Benefits | Technology | ISO viscosity grades | Specifications and approvals (Full details of approvals for all products can be obtained from your Shell representative; approvals and claims will vary by viscosity grade.) |
|---|---|---|---|---|
| Shell **Omala *S4*** *GX* | ■ Extra protection<br>■ Extra life<br>■ Special applications | Synthetic (advanced extreme-pressure, EP, system) | 68, 100, 150, 220, 320, 460, 680 | Approved by or meets Flender, David Brown, GE (wind turbines), Gamesa and many other equipment manufacturers<br>Industry standards: ANSI/AGMA 9005-E02 (EP); ISO 12925-1 CKD; DIN 51517-3 (CLP); US Steel 224 |
| Shell **Omala *S4*** *WE* | ■ Extra protection and life<br>■ Energy saving<br>■ Worm drives | Synthetic (polyalkylene glycol) | 150, 220, 320, 460, 680 | Approved by or meets Flender, Bonfiglioli, David Brown and many other equipment manufacturers<br>Industry standards: ANSI/AGMA 9005-E02 (EP); ISO 12925-1 CKE |
| Shell **Omala *S3*** *GP* | ■ Extra protection<br>■ Special applications | Conventional (enhanced EP system) | 220, 320, 460, 1500 | Approved by or meets David Brown and ArcelorMittal<br>Industry standards: ANSI/AGMA 9005-E02 (EP); ISO 12925-1 CKD; DIN 51517-3 (CLP); US Steel 224 |
| Shell **Omala *S2*** G | ■ Extra protection<br>■ Standard applications | Conventional (EP) | 68, 100, 150, 220, 320, 460, 680, 1000 | Approved by or meets David Brown, Cincinnati Machine, Flender (C/E) and many other equipment manufacturers<br>Industry standards: ANSI/AGMA 9005-E02 (EP); ISO 12925-1 CKD; DIN 51517-3 (CLP); US Steel 224 |
| Shell **Omala *S1*** *W* | ■ Reliable protection<br>■ Worm drives | Conventional (compounded fatty oil) | 460, 680 | Industry standards: AGMA 9005-EO2 (CP) |
| **Speciality gear oils** | | | | |
| Shell **Omala *S4*** *Wheel* | ■ Extra protection<br>■ Geared wheel hubs | Synthetic (EP) | 220, 320, 460, 680 | Approved by or meets GE (approved GEK-30375H – ISO 320-680) and David Brown<br>Industry standards: ANSI/AGMA 9005-E02 (EP); ISO 12925-1 CKD; DIN 51517-3 (CLP); US Steel 224 |
| Shell Spirax oils | A range of automotive gear, axle and transmission oils to meet the needs of on- and off-highway vehicles | | | Contact your Shell representative for details |

## FULL PRODUCT AND SERVICE PORTFOLIO

Shell Lubricants is the number-one finished lubricants supplier[2] and has a 60-year history of innovation. It constantly invests to develop better lubrication solutions, including advanced synthetic technologies such as

- Shell Tellus S4 ME synthetic hydraulic oil – for long life and energy saving
- Shell Corena S4 R air compressor oil – for up to 12,000 hours of protection.

In addition, Shell provides the world-leading Shell LubeAnalyst oil condition monitoring service, which is designed to help improve your business performance.

Whatever your needs or application, Shell can provide a full range of oils and greases, including synthetic, high-performance products and additional services.

"

"Shell Lubricants" refers to the various Shell companies engaged in the lubricants business.

[1]Saving reported by one customer. Actual savings may vary, depending on the application, the current oil used, the maintenance procedures and the condition of the equipment.

[2]Source: Kline & Company, "Competitive Intelligence for the Global Lubricants Industry, 2008–2018.

For more information, please contact